Installation Instructions for:
RIS-SHEAR-ADBLUE MK2
With Optional UPV-TEST-SS KIT

ALWAYS USE
NON-SPARK TOOLS!

PLEASE READ CAREFULLY BEFORE INSTALLATION

Risbridger
Quality Engineering Solutions

www.risbridger.com

ALWAYS USE NON-SPARK TOOLS!

IN THE BOX:

RIS-SHEAR CLAMP SET

RIS-SHEAR-ADBLUE MK2
Valve Assembly

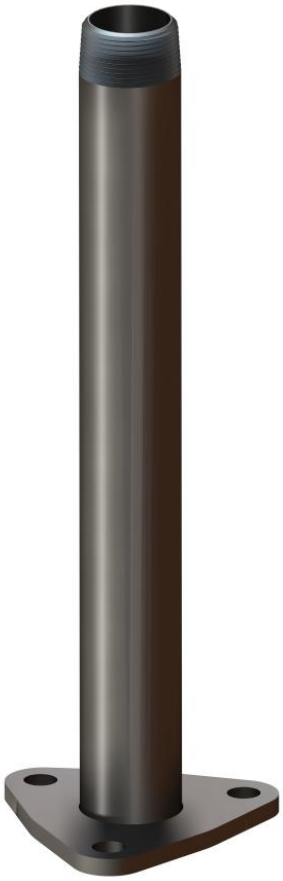

5281 – 1” BSPT UPV
EXTENSION
(OPTIONAL)

RIS-UPV-TEST-SS
(OPTIONAL)

1in BSPT UPV FLANGE x2
(OPTIONAL)

ALWAYS USE NON-SPARK TOOLS!

WARNING! – Care must be taken when installing a RIS-SHEAR-ADBLUE MK2 to ensure that the blue aluminium body remains free from twisting or physical damage. Damage to the blue aluminium body may result in premature activation of the shear valve.

USE THIS HEX WHEN CONNECTING UPPER PIPEWORK

DO NOT TIGHTEN OR TWIST THIS AREA

USE THIS HEX WHEN CONNECTING LOWER PIPEWORK

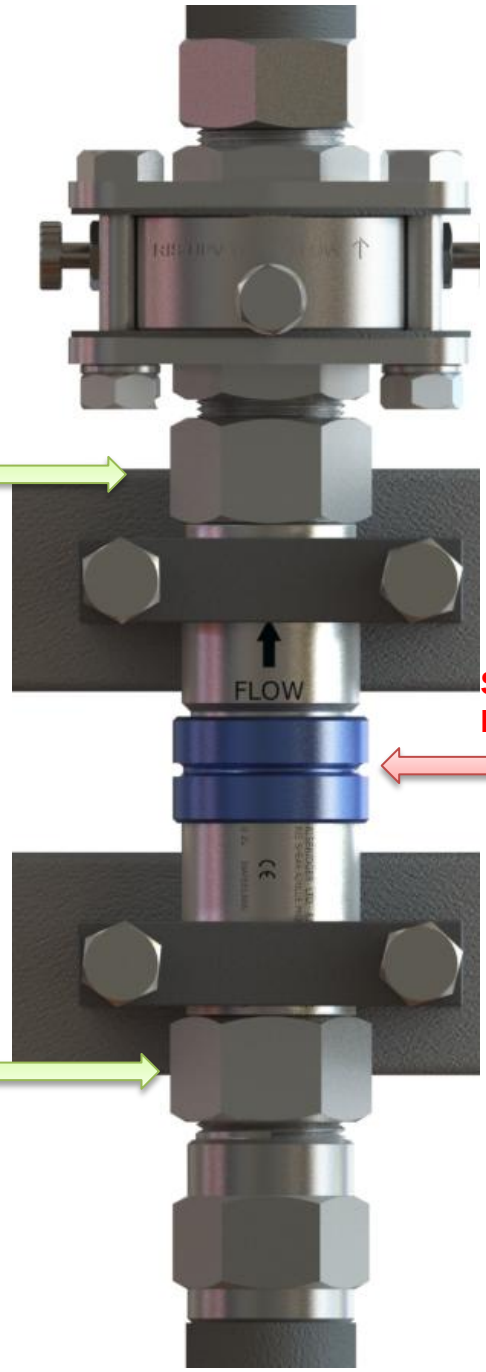

SHEAR VALVE BREAK POINT

ENSURECONNECTION IS TO **FIXED PIPEWORK (to prevent loosening of adaptors)**

ALWAYS USE NON-SPARK TOOLS!

RECOMMENDED INSTALLATION TOOLS REQUIRED FOR RIS-SHEAR-ADBLUE

- Spanners: M17, 1.5” AF, Adjustable
- Sockets: M17
- Torque Wrench
- Thread Sealant (Loctite 577 or equivalent recommended)
- Piston Drill
- Tape Measure/Rule

INSTALLATION

Before installing a RIS-SHEAR-ADBLUE MK2 it is very important that the upper and lower attachment points are correctly located to avoid stressing the valve.

BEFORE INSTALLATION BLOW THROUGH THE VALVE IN THE DIRECTION OF THE FLOW TO ENSURE VALVE HAS NOT BEEN ACTUATED!

1. Drill lower sub-frame as detailed below:

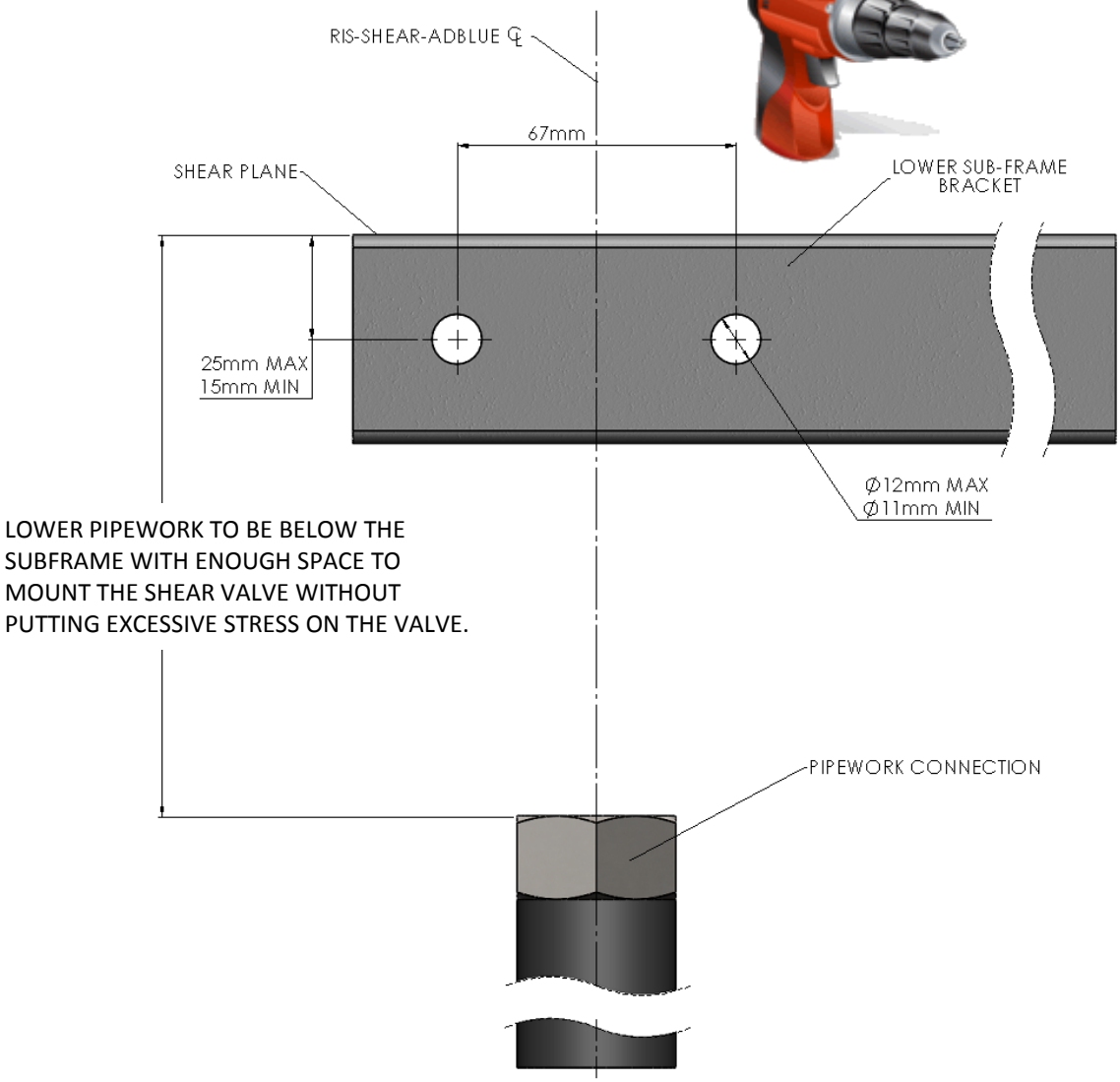

ALWAYS USE NON-SPARK TOOLS!

2. Drill upper sub-frame as detailed below:

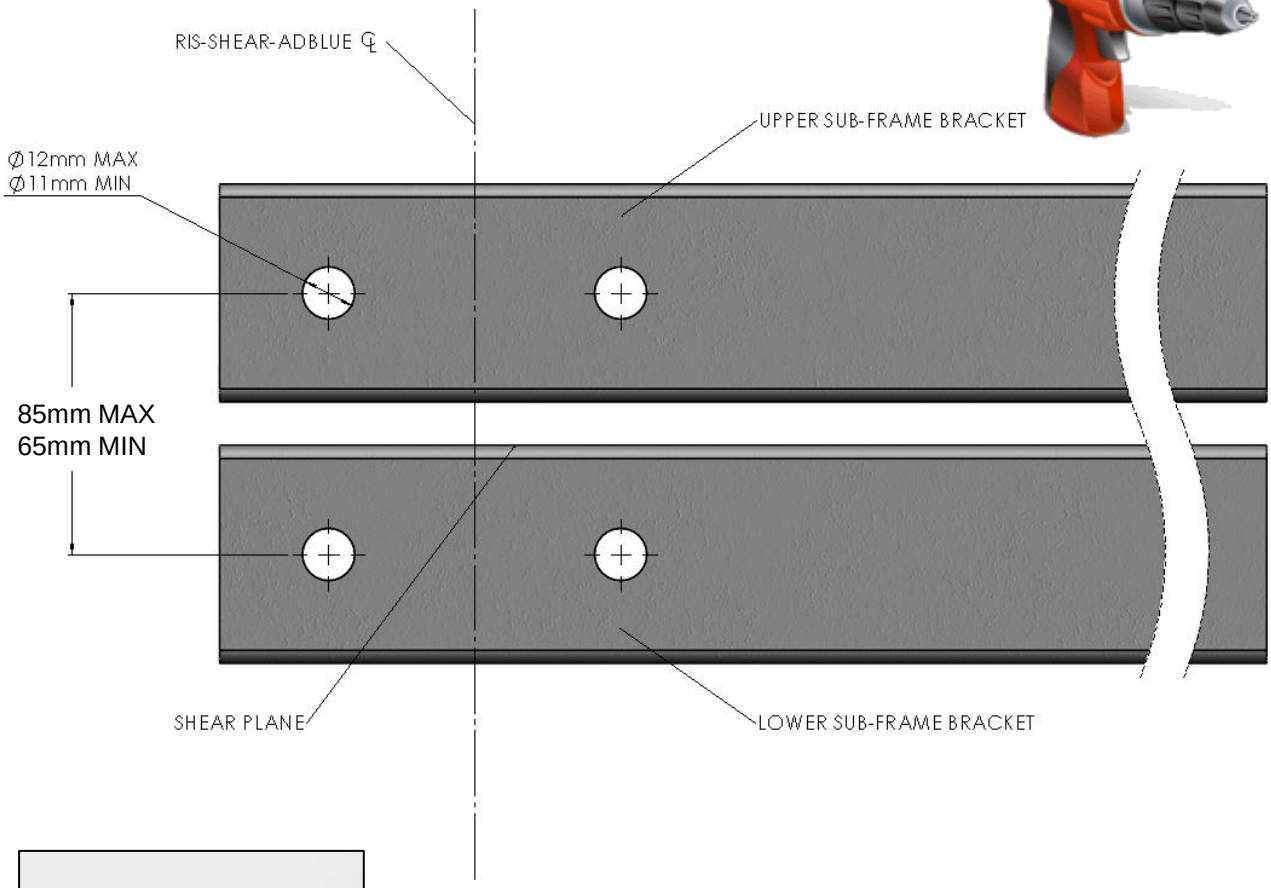

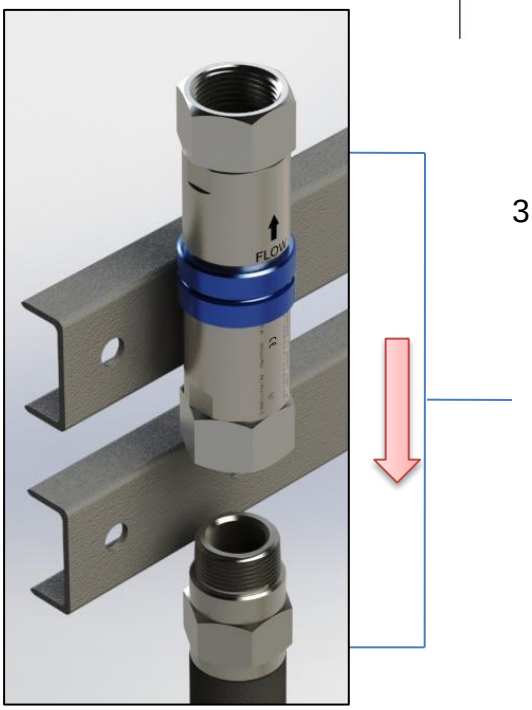

3. Remove the lower red plastic packing plug and fit valve to lower pipework using thread sealant. **Only use the appropriate stainless steel hexagon flats when tightening the fitting** **DO NOT STRESS THE BLUE ALUMINIUM BODY.**

   Once the valve assembly is attached to the pipe work, check to ensure that the shear point of the valve is above the lower sub-frame.

4. Fit with clamps, nyloc nuts, washers and bolts supplied to holes drilled previously using M17 sockets and a torque wrench. Tighten to 25 lbs/in – do not over tighten on the white plastic body. Fit the bottom clamp first to aid alignment.

   !! **Care must be taken to ensure the valve is not stressed at this point, as internal damage maybe caused to the shear mechanism. !!**

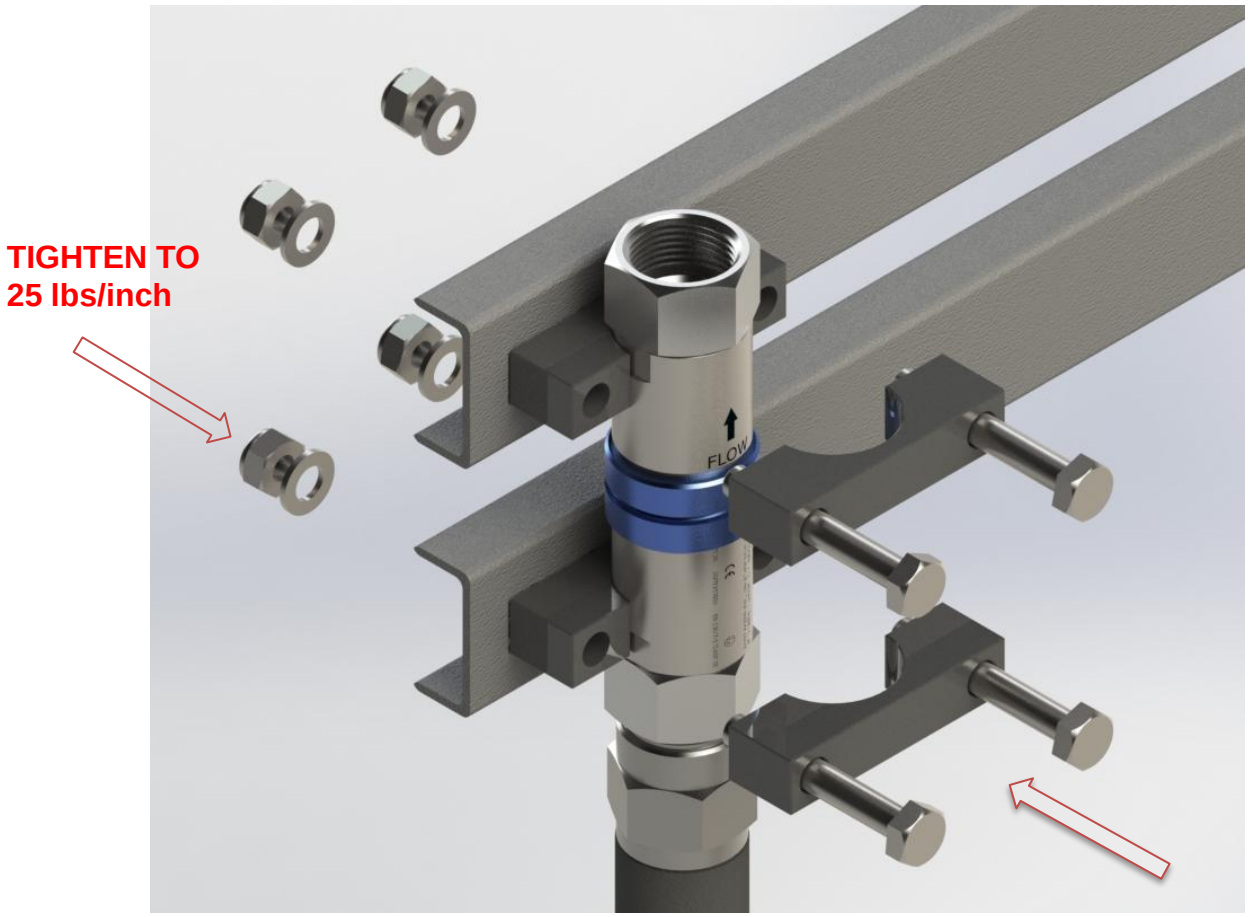

IMPORTANT!

ENSURE AFTER FITTING THE VALVE THAT THE SHEAR POINT IS ABOVE THE LOWER SUB-FRAME

ALWAYS USE NON-SPARK TOOLS!

Steps 5, 6 & 7 refer to fitting a Stainless UPV (optional – as supplied by Risbridger)
If no UPV is being fitted, simply connect upper pipework using thread sealant.

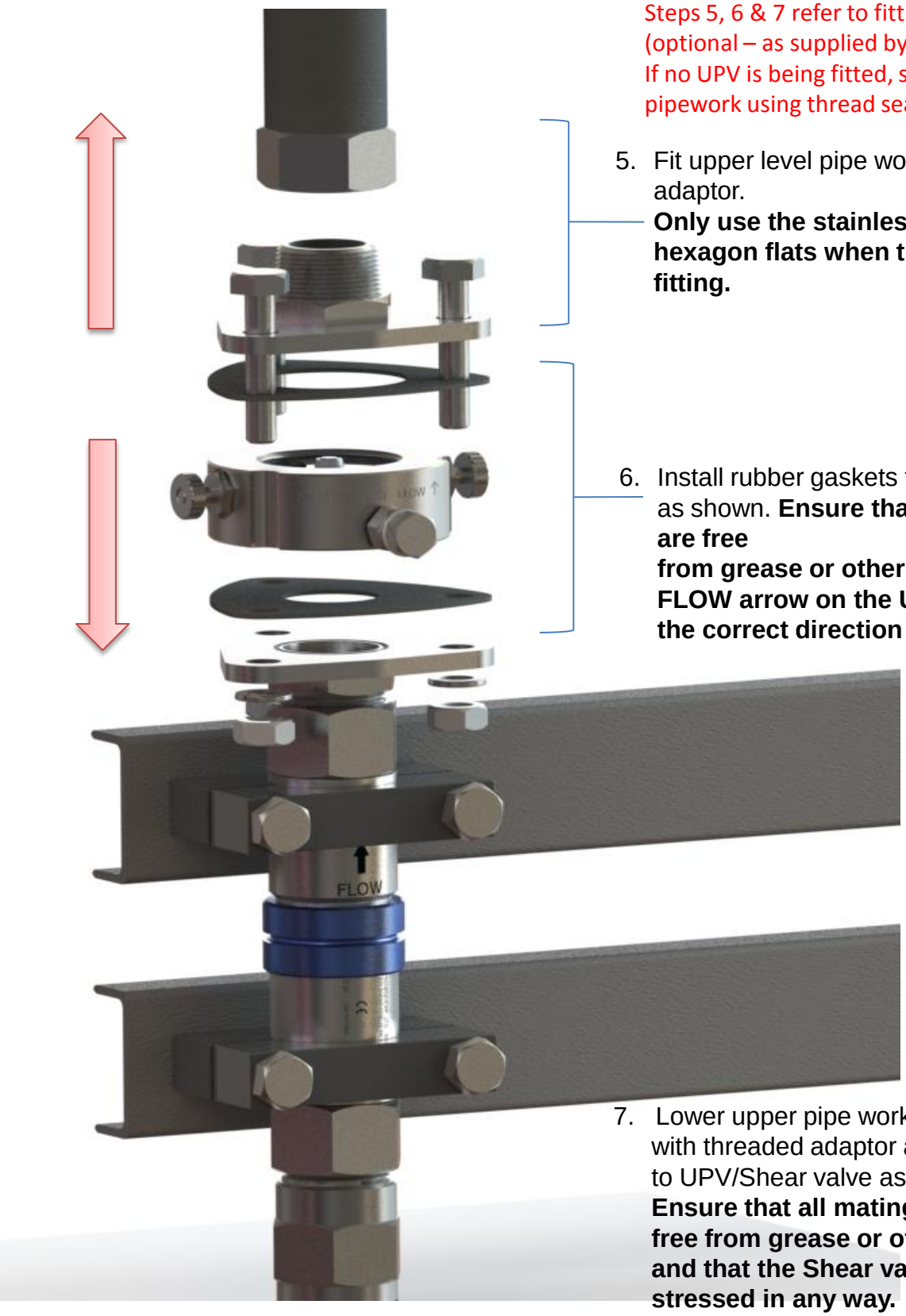

5. Fit upper level pipe work to threaded adaptor.
Only use the stainless steel hexagon flats when tightening the fitting.

6. Install rubber gaskets together with UPV as shown. **Ensure that all mating faces are free from grease or other oils and that the FLOW arrow on the UPV is pointing in the correct direction**

7. Lower upper pipe work together with threaded adaptor and secure to UPV/Shear valve assembly.
Ensure that all mating faces are free from grease or other oils and that the Shear valve is not stressed in any way.

FOR REFERENCE.

Risbridger Ltd offer a range of tools and accessories specifically designed for Risbridger products. For further details please contact Risbridger or alternatively, order direct from our website: www.risbridger.com

WARRANTY.

All RISBRIDGER Ltd products are guaranteed against defects in material and workmanship for a period of 12 months from the date of purchase subject to normal use and service. The sole obligation under this warranty is limited to repair or replacement, at the option of RISBRIDGER Ltd any product found to be defective upon examination provided that such product will be returned for inspection carriage paid, within three months of installation. Liability is strictly limited to replacement of defective parts manufactured by RISBRIDGER Ltd and no liability can be accepted for any loss or consequential damages arising from the installation or use of any products supplied by RISBRIDGER Ltd whatsoever the cause. This warranty shall not apply to any product subject to abuse, negligence, accident, misapplication or any alteration by others.